Electrolux

Factory Parts Catalog

Product No.	EIFLS55IIW0	EIFLS55IMB0	EIFLS55IRR0
Market	North America	North America	North America
Color	white	MED. Blue	red
Volts	120	120	120
Wiring Diagram	137058400	137058400	137058400
Owner's Guide	137262400	137262400	137262400
Energy Guide	137022810	137022810	137022810
Installation Instructions	137064300	137064300	137064300

Electrolux

Electrolux Major Appliances
North & Latin America
P.O. BOX 212378
AUGUSTA, GA 30917

Publication No.
5995554580
09/10/26
(EN/SERVICE/WTC)
154

FRONT-LOAD WASHING MACHINE

Model No.
EIFLS55I

Copyright © 2009 Electrolux Home Products, Inc.
All rights reserved.

CONTROL PANEL

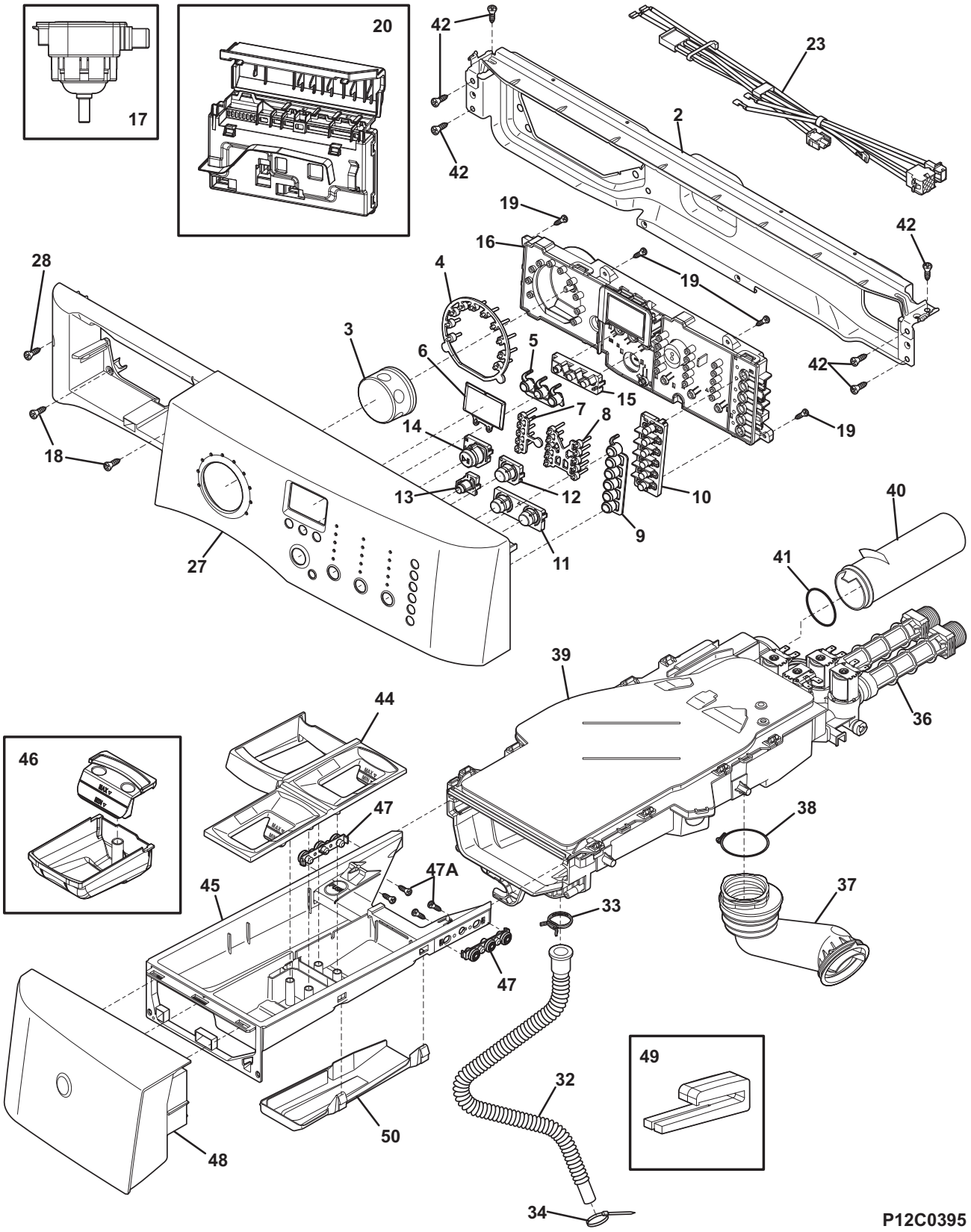

CONTROL PANEL

Model Index: A EIFLS55I (EIFLS55IIW0)
B EIFLS55I (EIFLS55IMB0)
C EIFLS55I (EIFLS55IRR0)

POS. NO	PART NO.				DESCRIPTION
2	134887400	A	B	C	Bracket, control panel, mounting
3	134766500	A	B	C	Knob, retracting, complete asmy
4	134907400	A	B	C	Pipe, knob light
5	134872100	A	B	C	Ring, display button, light
6	134767700	A	B	C	Lens, LCD
7	134895900	A	B	C	Pipe, modifer light, group 1
8	134902200	A	B	C	Pipe, modifer light, group 2&3
9	134894200	A	B	C	Ring, option button, light
10	137032300	A	B	C	Button, option
11	137032200	A	B	C	Button, modifier, button 2 & 3
12	137032100	A	B	C	Button, modifier, button 1
13	137032000	A	B	C	Button, off
14	137015900	A	B	C	Button, start/pause
15	137031900	A	B	C	Button, display
16 #	134994910	A	B	C	Control Board, printed circuit, with housing
17 #	134762010	A	B	C	Switch, pressure
18	131302800	A	B	C	Screw, 10-16AB x 0.375
19	134402900	A	B	C	Screw, Phillips, 6-19 x 0.650
20 #	134640610	A	B	C	Control Assembly, main electronic, with steam
23 #	134922900	A	B	C	Harness, wiring, main
27	137249210	A	-	-	Panel, control console
27	137249215	-	B	-	Panel, control console
27	137249230	-	-	C	Panel, control console
28	131302901	A	B	C	Screw, 10-16 x 0.750
32	134625500	A	B	C	Hose, disp-to-bellows
33	131306216	A	B	C	Clamp
34	5303321209	A	B	C	Cable Tie, 5.60 inch
36 #	134637810	A	B	C	Valve water, dispenser, no thermister
36*	134178901	A	B	C	Screw, 8-18AB x 0.455
37	134625700	A	B	C	Hose, disp-to-tub
38	134372400	A	B	C	Clamp, tub hose
39	137108710	A	B	C	Housing, dispenser, valve, cover
39*	134371300	A	B	C	Gasket, disp-to-valve
40	134372100	A	B	C	Tube, disp-to-overflo
41	134372200	A	B	C	O-ring, overflow tube
42	131168200	A	B	C	Screw, pan head, 8-18B x 0.31
44	134638310	A	B	C	DRAWER COVER, with graphics
45	134638200	A	B	C	Drawer, dispenser
46	137143800	A	B	C	Cup, dispenser, liquid
47	134657100	A	B	C	Guide, dispener drawer
47A	134654500	A	B	C	Screw, pan head, #6-20 X .28
48	137249510	A	-	-	Drawer Assembly, dispenser, white
48	137249515	-	B	-	Drawer Assembly, dispenser, blue
48	137249530	-	-	C	Drawer Assembly, dispenser, red
49	137105200	A	B	C	Guide, drawer console
50	134638400	A	B	C	Conveyor, dispenser, lower
*	137022810	A	B	C	Energy Guide

Functional Parts
* Non-Illustrated Parts

CABINET/TOP

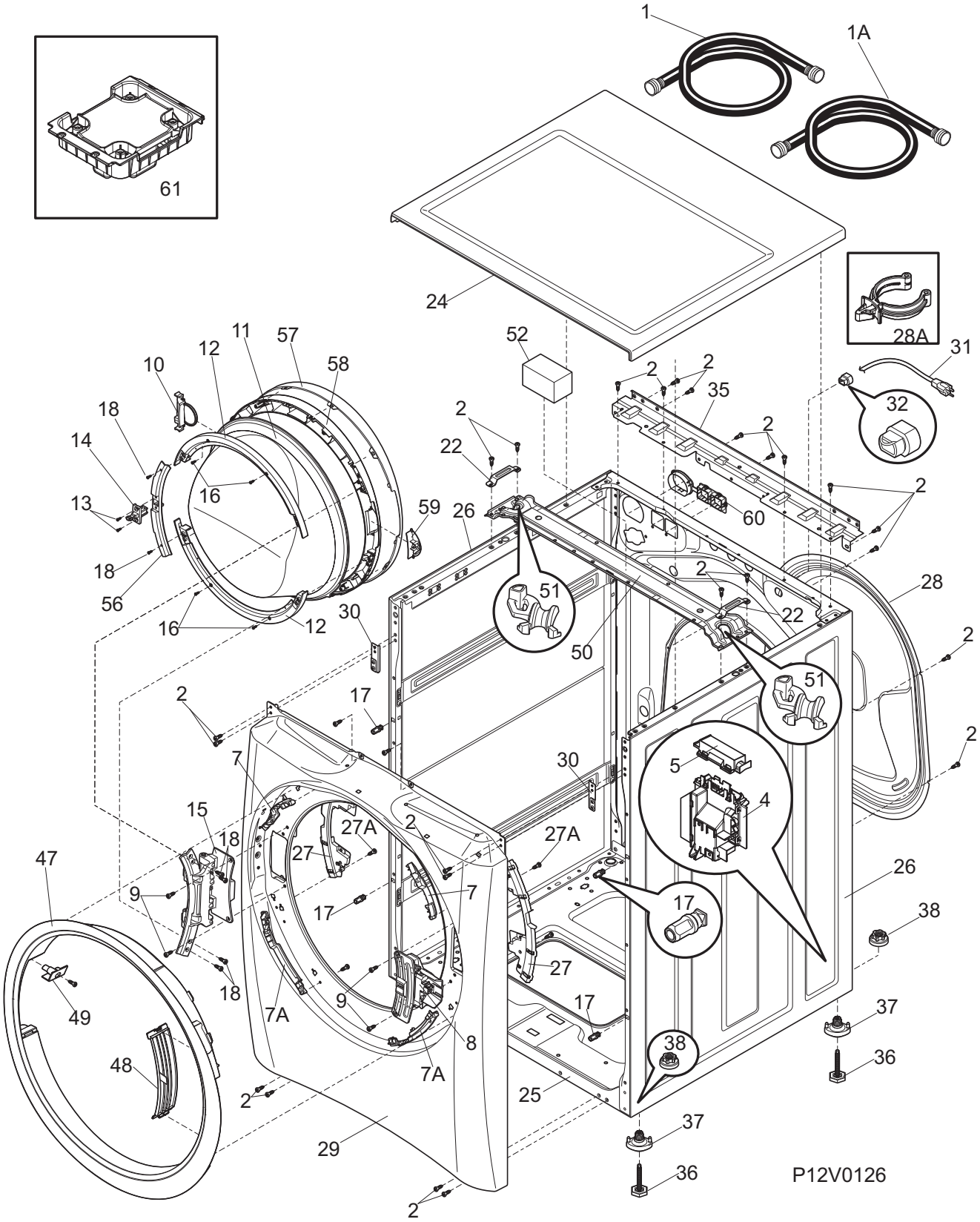
1
1A
61
24
28A
31
52
2
35
32
11
57
12
58
10
18
14
22
16
13
59
26
60
56
51
28
30
50
17
7
5
4
15
27A
27
47
9
26
38
49
7A
8
48
25
37
36
29
P12V0126

CABINET/TOP

Model Index: A EIFLS55I (EIFLS55IIW0)
B EIFLS55I (EIFLS55IMB0)
C EIFLS55I (EIFLS55IRR0)

POS. NO	PART NO.				DESCRIPTION
1	137015502	A	B	C	ASMY-HOSE INLET (COLD), water inlet
1A	137015503	A	B	C	ASMY-HOSE INLET (HOT), water inlet
2	131168200	A	B	C	Screw, pan head, 8-18B x 0.31
4 #	134618200	A	B	C	Control Board, motor
5	134649700	A	B	C	Cover, motor control, housing
5*	134178901	A	B	C	Screw, 8-18AB x 0.455
7	137046800	A	B	C	Bracket, trim ring mtg, upper
7A	137046700	A	B	C	Bracket, trim ring, mounting
8 #	134629900	A	B	C	Door Lock
8*	134868900	A	B	C	Harness, door lock, front panel
8*	134994500	A	B	C	Cover, door lock plug
9	131303300	A	B	C	Screw, pan head, 10-16AB x 0.500, locking
10	134933900	A	B	C	Assembly, indicator, complete
11	134936100	A	B	C	Glass, door
12	134696901	A	B	C	Frame, inner door
13	131302901	A	B	C	Screw, 10-16 x 0.750
14	134937300	A	B	C	Assembly, strike, complete
15	137107500	A	B	C	Hinge, door, washer
15*	134601900	A	B	C	Screw, flat head, M5 x .8 x 17.5
16	134788000	A	B	C	Screw, #8 X1.18, pan hd
17	134638700	A	B	C	Clip, assembly
18	134790400	A	B	C	Screw, #10X1.25, oval head
22	134648500	A	B	C	Bracket-spring, retainer
24	134638510	A	-	-	Panel, work top, white
24	134638515	-	B	-	Panel, work top, blue
24	134638530	-	-	C	Panel, work top, red
25	134646000	A	B	C	Base
26	134645910	A	-	-	Panel, side, white
26	134645915	-	B	-	Panel, side, blue
26	134645930	-	-	C	Panel, side, red, left or right
27	134879800	A	B	C	Protector, door lock, harness
27A	134790600	A	B	C	Screw, #10-24 X 1.0", pan hd
28	134646200	A	B	C	BACK PANEL SERVICE, service
28A	134649400	A	B	C	Fastener, hose clip, external
29	134618710	A	-	-	Panel, cabinet front, white
29	134618715	-	B	-	Panel, front, blue
29	134618730	-	-	C	Panel, cabinet front, red
30	134858000	A	B	C	Bracket, front panel, LH
30	134858010	A	B	C	Bracket, front panel, RH
31 #	137011400	A	B	C	Power Cord, electric svce, 120 16A
32	5303209428	A	B	C	Bushing, power cord
35	134713100	A	B	C	Bracket, top panel mtg., rear
36	134639100	A	B	C	Leveling Leg, screw
37	134617600	A	B	C	Bushing, leveling leg
38	134639200	A	B	C	Nut, leveling leg, bushing
47	134618800	A	B	C	Trim, front panel
48	134967200	A	B	C	Cover, trim ring, washer
49	134651200	A	B	C	Retainer, trim ring

Functional Parts
* Non-Illustrated Parts

CABINET/TOP

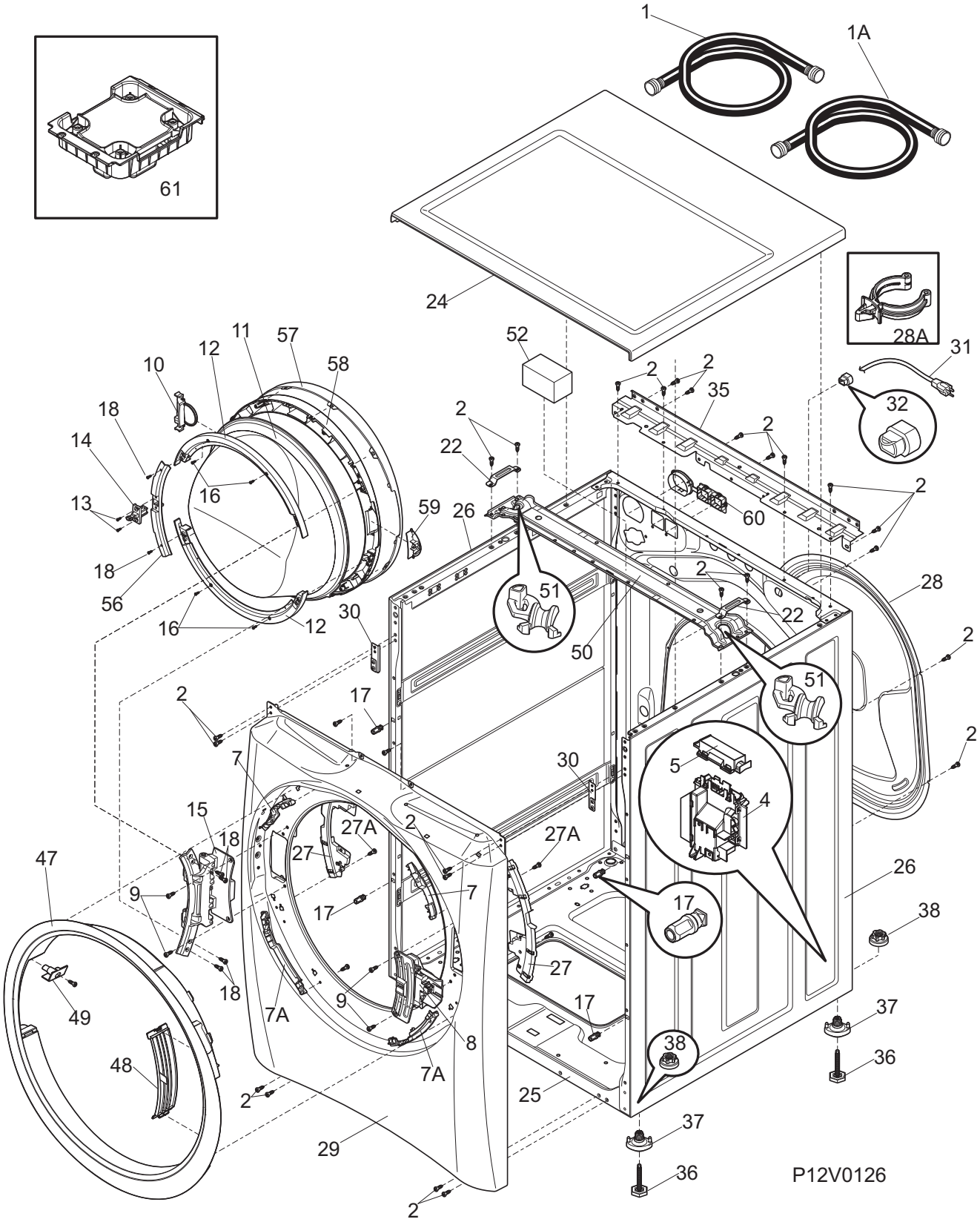
1
1A
61
24
28A
31
52
2
35
32
11
57
12
58
10
18
14
22
16
13
59
26
60
56
51
28
30
50
17
7
5
4
15
27A
27
47
9
26
38
49
7A
8
48
25
37
36
29
P12V0126

CABINET/TOP

Model Index: A EIFLS55I (EIFLS55IIW0)
B EIFLS55I (EIFLS55IMB0)
C EIFLS55I (EIFLS55IRR0)

POS. NO	PART NO.				DESCRIPTION
50	134645600	A	B	C	Bracket, tub suspension
51	134655800	A	B	C	Protector, tub suspension, spring hook, (2)
52	131931202	A	B	C	Dampener, vibration, foam
56	134925000	A	B	C	Cover, strike
57	134932900	A	B	C	Lens, decorated door
58	134697200	A	B	C	Panel, outer door
59	134931500	A	B	C	Cover, indicator hole
60	134372000	A	B	C	Grommet, dispenser, back panel
61	134652000	A	B	C	Damper, mass vibration
61*	131202300	A	B	C	Screw, 10-16AB x 0.625
*	134629400	A	B	C	Screw, MC5X8.5 TORX, cabinet mtg
*	134876500	A	B	C	Clip, hose, drain, rear-panel

MOTOR/TUB

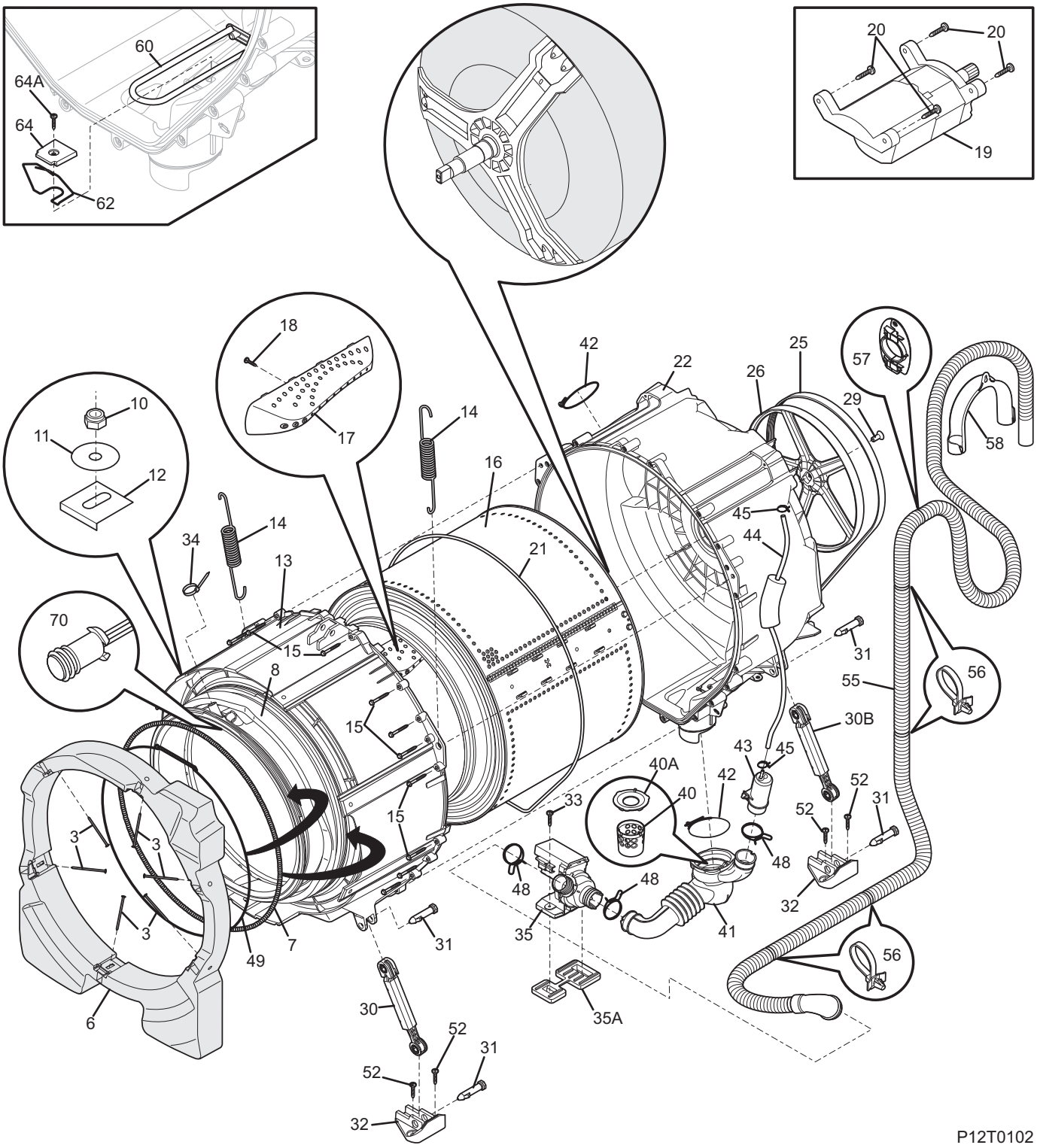
60
64A
64
62
20
20
19
18
17
10
11
12
14
14
34
13
16
42
22
26
25
29
57
58
45
44
21
70
15
8
15
15
31
55
56
30B
43
45
40A
40
42
52
31
52
33
48
48
48
32
35
41
3
3
3
7
49
31
6
30
52
31
52
32
35A
56
P12T0102

MOTOR/TUB

Model Index: A EIFLS55I (EIFLS55IIW0)
B EIFLS55I (EIFLS55IMB0)
C EIFLS55I (EIFLS55IRR0)

POS. NO	PART NO.				DESCRIPTION
3	131793304	A	B	C	BOLT-CARRIAGE, 1/4-20 UNRC 2A
6	137007300	A	B	C	Counterweight, front, one piece
7	134616200	A	B	C	Spring, boot retainer
8 #	134616100	A	B	C	Bellows Kit, boot, w/light hole
10	131304700	A	B	C	Nut, hex, 1/4-20 UNC-2B, (2)
11	131276900	A	B	C	Washer, Bellville, spring steel
12	134430600	A	B	C	Plate, counterweight
13	134643000	A	B	C	Shell, outer tub, front
14 #	134643500	A	B	C	Spring Asmy, suspension
15	131303900	A	B	C	Screw, hex washer head, 1/4-10A x 2.165
16	137045000	A	B	C	Drum Assy, spin basket
17	134657000	A	B	C	Vane and nozzle, drum
18	131302800	A	B	C	Screw, 10-16AB x 0.375
19 #	134638900	A	B	C	Motor, induction, controled
19*	134618500	A	B	C	Harness, wiring, motor
20	131303500	A	B	C	Screw, 12-14AB x 1.50, motor mtg.
21	134361900	A	B	C	O-ring, tub
22	134642100	A	B	C	Shell, outer tub, rear, with bearing
25 #	134616700	A	B	C	Belt, drive, poly-V
26 #	134362600	A	B	C	Pulley, drum drive, large, rear
29	134408400	A	B	C	Screw, 10.9 class, M10 x 25 mm
30	137040900	A	B	C	Shock Absorber, (HP) and clips, front
30B	137041000	A	B	C	Shock Absorber, (SS) and clips, back
31	131268300	A	B	C	Pin, shock mtg.
32	134363200	A	B	C	Bracket, shock mtg.
32*	137110800	A	B	C	Cushion, shock bracket, left rear
33	134637200	A	B	C	Screw, #10-16X1.125, hexwasher head
34	5303321209	A	B	C	Cable Tie, 5.60 inch
35	137240800	A	B	C	Pump, drain
35A	134618100	A	B	C	Pad, vibration, PUMP MOTOR
40	134640200	A	B	C	Filter, pump
40A	134640300	A	B	C	Cover, filter
41	134639900	A	B	C	Hose, coin trap, tub-to-pump
42	134737300	A	B	C	Clamp, hose
43	134636800	A	B	C	Chamber, air
44	134369900	A	B	C	Hose, air pressure
45	131306202	A	B	C	Clamp, hose
48	131306234	A	B	C	Clamp, hose, wire
49	134616300	A	B	C	Clamp, bellows, spring held
52	131202300	A	B	C	Screw, 10-16AB x 0.625
55 #	137003400	A	B	C	Hose, drain-one piece
56	137003500	A	B	C	Cable Tie, push mount
57	134641100	A	B	C	Bracket, drain hose mtg, rear
58	134440700	A	B	C	Hanger, drain hose
60#	134552301	A	B	C	Element Assembly, heating (1000W)
62	134642300	A	B	C	Support, heating element
64	134644600	A	B	C	Support, heating element
64A	134638100	A	B	C	Screw, #8-18 x .50, truss head
70 #	134635500	A	B	C	Lamp Assy, LED, 20 W, complete asmy

WIRING DIAGRAM

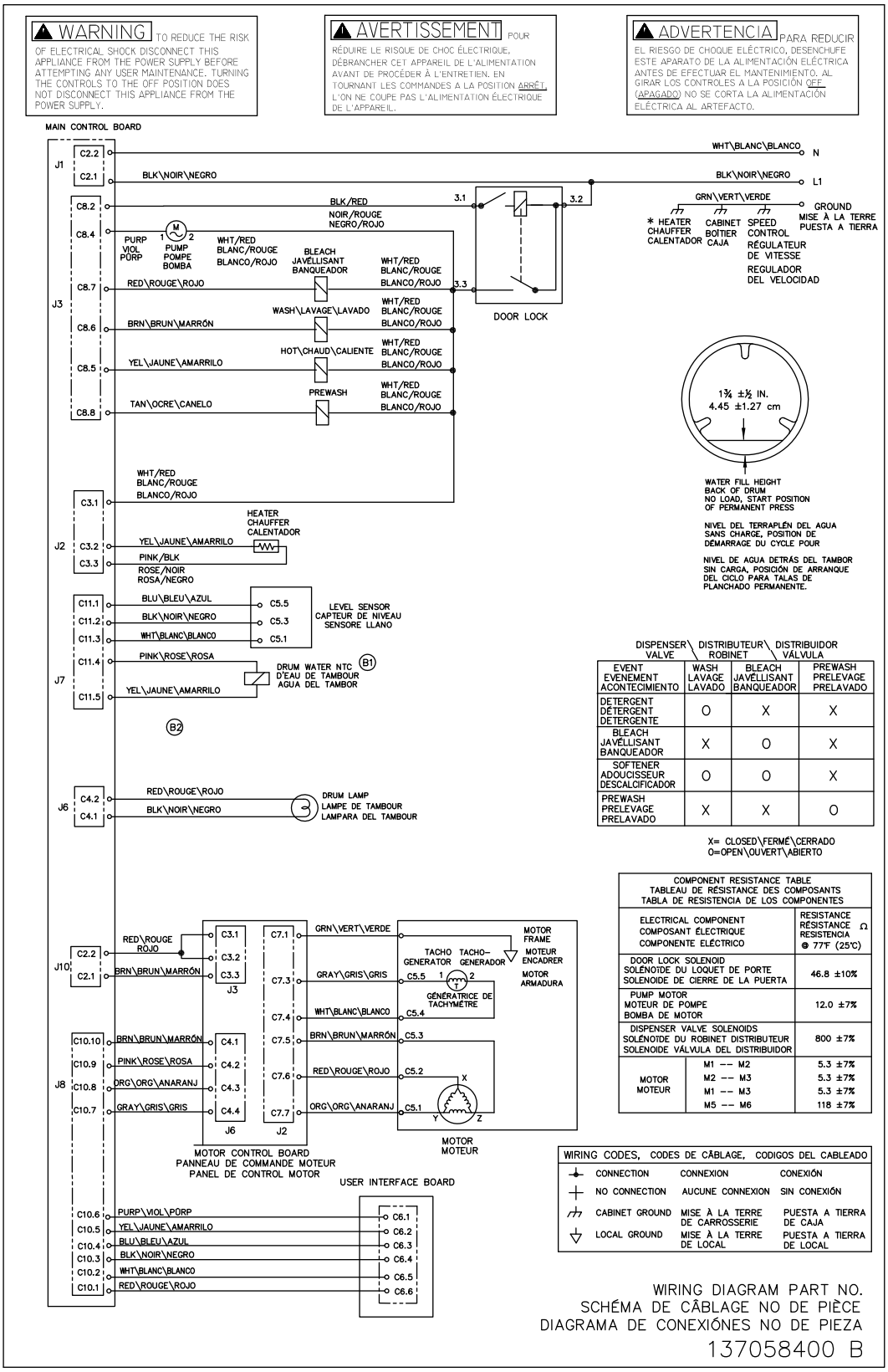

DISPENSER VALVE / DISTRIBUTEUR ROBINET / DISTRIBUIDOR VÁLVULA			
EVENT EVÉNEMENT ACONTECIMIENTO	WASH LAVAGE LAVADO	BLEACH JAVÉLLISANT BANQUEADOR	PREWASH PRÉLEVAGE PRELAVADO
DETERGENT DÉTERGENT DETERGENTE	O	X	X
BLEACH JAVÉLLISANT BANQUEADOR	X	O	X
SOFTENER ADOUCISSEUR DESCALCIFICADOR	O	O	X
PREWASH PRÉLEVAGE PRELAVADO	X	X	O

X= CLOSED\FERMÉ\CERRADO
O=OPEN\OUVERT\ABIERTO

COMPONENT RESISTANCE TABLE TABLEAU DE RÉSISTANCE DES COMPOSANTS TABLA DE RESISTENCIA DE LOS COMPONENTES		
ELECTRICAL COMPONENT COMPOSANT ÉLECTRIQUE COMPONENTE ELÉCTRICO		RESISTANCE RÉSISTANCE RESISTENCIA Ω @ 77°F (25°C)
DOOR LOCK SOLENOID SOLÉNOÏDE DU LOQUET DE PORTE SOLENOIDE DE CIERRE DE LA PUERTA		46.8 ±10%
PUMP MOTOR MOTEUR DE POMPE BOMBA DE MOTOR		12.0 ±7%
DISPENSER VALVE SOLENOIDS SOLÉNOÏDE DU ROBINET DISTRIBUTEUR SOLENOIDE VÁLVULA DEL DISTRIBUIDOR		800 ±7%
MOTOR MOTEUR	M1 -- M2	5.3 ±7%
	M2 -- M3	5.3 ±7%
	M1 -- M3	5.3 ±7%
	M5 -- M6	118 ±7%

WIRING CODES, CODES DE CÂBLAGE, CODIGOS DEL CABLEADO		
CONNECTION	CONNEXION	CONEXIÓN
NO CONNECTION	AUCUNE CONNEXION	SIN CONEXIÓN
CABINET GROUND	MISE À LA TERRE DE CARROSSERIE	PUESTA A TIERRA DE CAJA
LOCAL GROUND	MISE À LA TERRE DE LOCAL	PUESTA A TIERRA DE LOCAL